V Groove Wheels

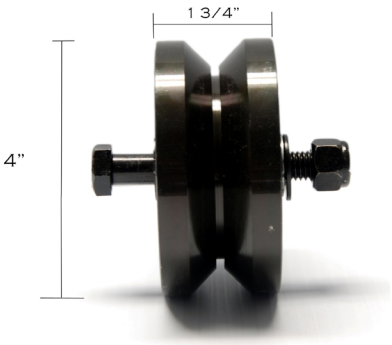

4" V-Groove Wheel
K-VGS400

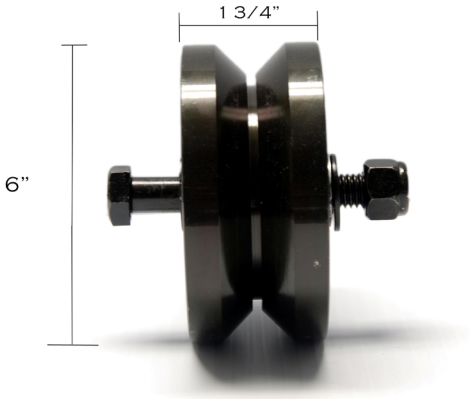

6" V-Groove Wheel
K-VGS600

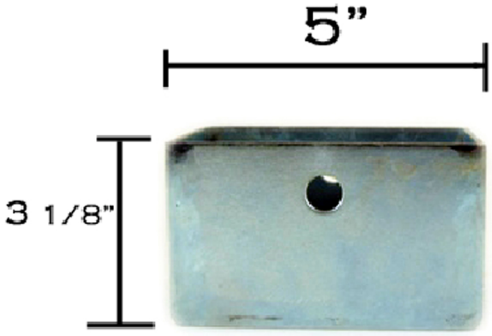

4" V-Groove Wheel Box
K-VGB400

6" V-Groove Wheel Box
K-VGB600

www.KodiakBlack.com

KODIAK BLACK

SECURITY BRANDS · AAS AMERICAN ACCESS SYSTEMS · SUMMIT ACCESS CONTROL

V Groove Wheels

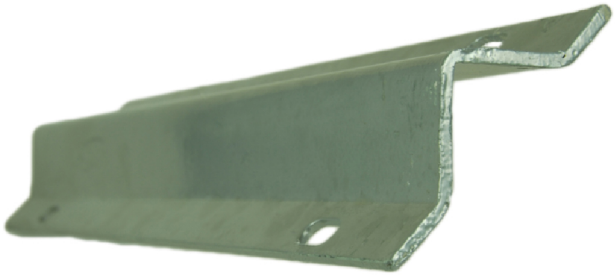

1 Piece Galvanized Steel V-Track For V-Groove Wheels.

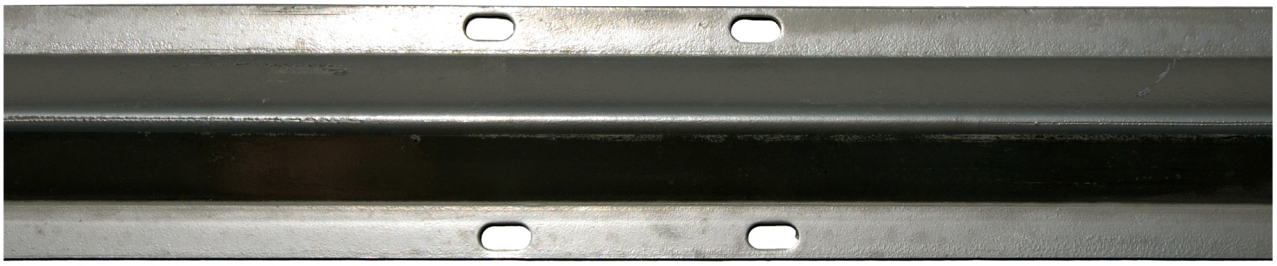

MIDDLE OF TRACK @ 10'

K-VT-10C - 10ft

K-VT-20C - 20ft

KODIAK BLACK

www.KodiakBlack.com