Sprocket Assembly Replacement

This repair will require removal of the unit from it's mounting hardware and repair made on a bench or floor. Refer to your Owners Manual for proper assembly and carefully read and understand all warnings and cautions pertaining to your unit.

WARNING

BE SURE ELECTRICAL POWER HAS BEEN DISCONNECTED FROM THE INPUT POWER LINES PRIOR TO REMOVING THE MOTOR COVER.

WARNING

ANY AND ALL REPAIRS MADE TO THIS UNIT MUST BE PERFORMED WITH THE DOOR DISCONNECTED FROM THE OPENER AND IN THE CLOSED POSITION.

1. Pull emergency release cord on carriage to disengage opener to close door if necessary. (If unable to lower door using opener, use extreme caution manually closing door. Before pulling emergency release cord, make certain people and objects are clear of door opening.)
2. Unplug opener power cord from power receptacle.
3. Remove Battery Backup (BBU) from powerhead if equipped:
   - Unplug harness from top of powerhead.
   - Remove two screws securing BBU to rear of powerhead.
   - Tilt BBU up and slide mounting brackets out.
   - Set BBU aside. FIG. 1.
4. Remove lens cover(s) by pressing top tabs down and slide lens cover(s) out. Remove light bulbs. FIG. 2.
5. Remove wall control and Safe-T-Beam® wires from terminal block located on side of two bulb models or rear of one bulb models FIG. 3. Use small common screwdriver to press in on orange tabs while gently pulling wires from block. Mark wires to help facilitate replacement.
6. Remove clevis pin and hairpin from door arm assembly. FIG. 4.
7. Remove opener from mounting hardware and set opener assembly on clean work surface.

FIG. 1.

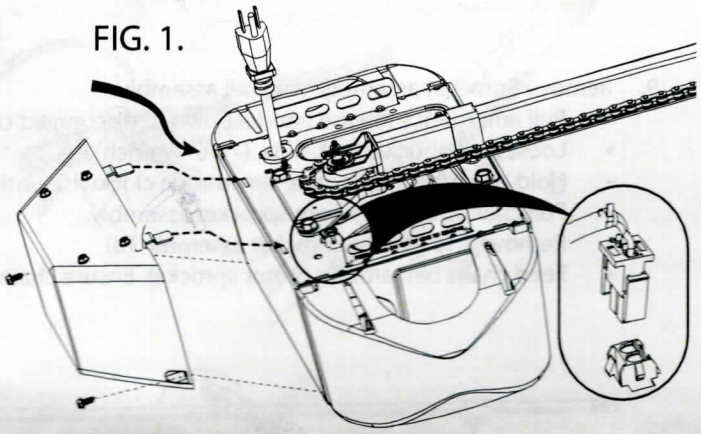

Two Bulb Model

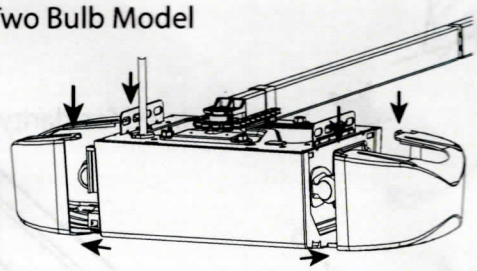

FIG. 2.

One Bulb Model

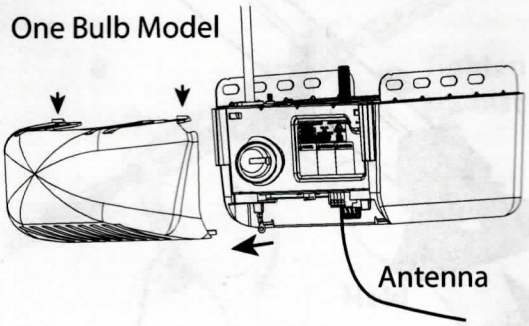

FIG. 3.

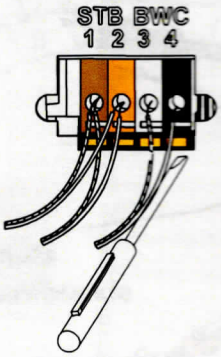

FIG. 4.

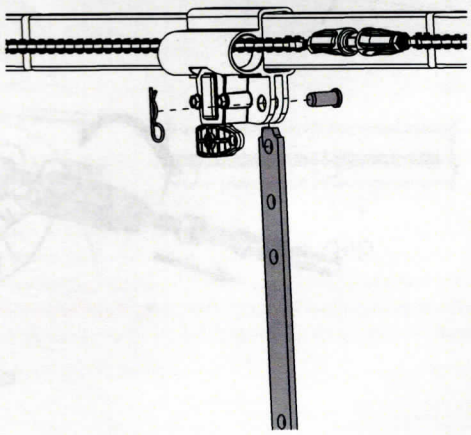

Parts removed for clarity

8. Remove rail assembly from powerhead:
   - On belt drive models, remove two screws and belt retainer cover from rail assembly. FIG. 5.
   - Remove four rail mounting screws and slide rail assembly off of motor shaft. FIG. 6.

FIG. 5.

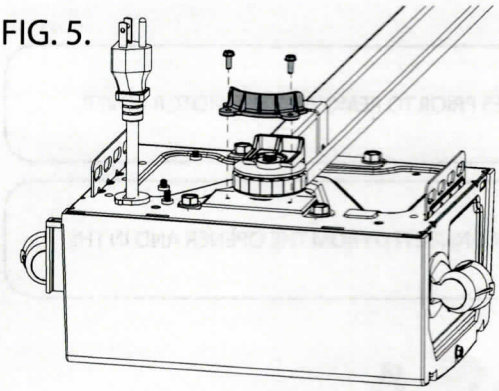

FIG. 6.

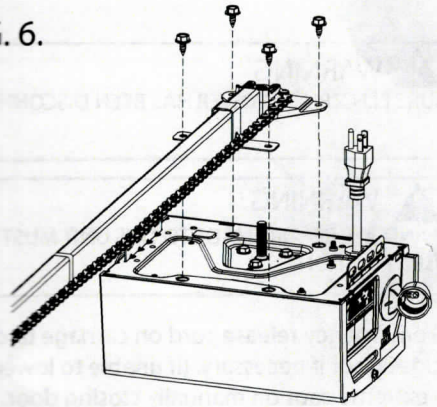

9. Remove Sprocket assembly from rail assembly.
   - Pull emergency release handle down to disconnect carriage and slide out of the way. (a)
   - Loosen turnbuckle lock-nuts. (7/16" wrench) (b)
   - Hold chain/belt and rotate turnbuckle clockwise until threaded ends are free. (c)
   - Pull chain/belt away from sprocket assembly.
   - Remove and replace sprocket assembly. (d)
   - Feed chain/belt around motor sprocket. Ensure chain/belt is not twisted or bound.

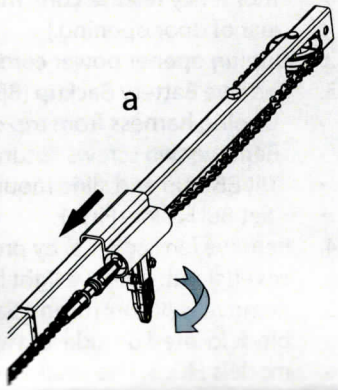

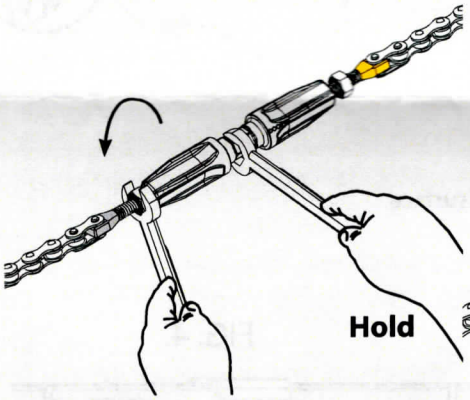

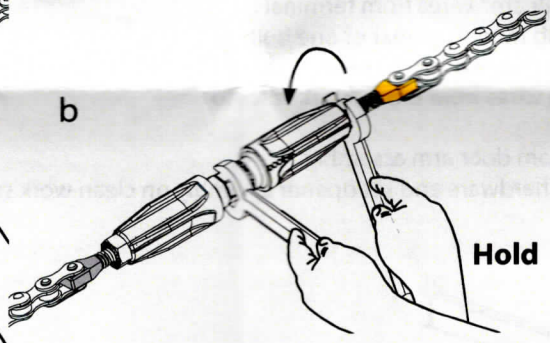

Parts removed for clarity

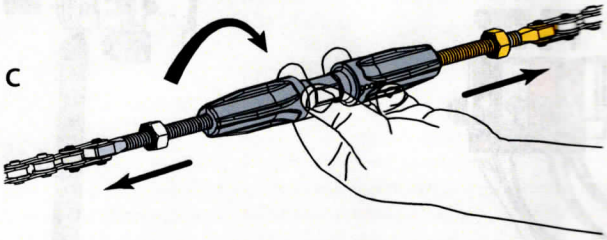

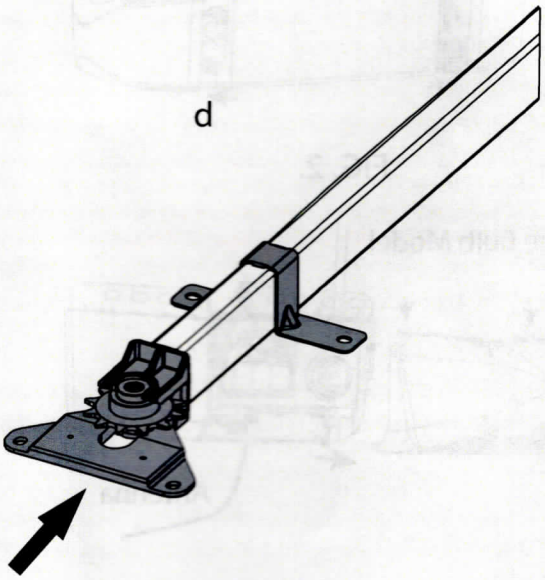

10. Install chain/belt rail assembly:
    - Install turnbuckle with "door" end arrow onto the gold threaded end by rotating counter-clockwise one full turn. (a)
    - Disengage carriage assembly by rotating release handle downward and insert turnbuckle through the carriage as shown. Ensure chain/belt is not twisted or bound. (b)
    - Continue routing the chain/belt assembly until turnbuckle is near the middle of the rail. Insert silver threaded shaft into the turnbuckle and rotate turnbuckle counter-clockwise one full turn. (c)
    - Hold chain/belt and rotate turnbuckle with thumbs counter-clockwise until chain/belt is tensioned properly. Measure chain/belt tension on opposite side of rail until 1/4" from bottom of rail. (d)
    - Once proper tension has been established, hold turnbuckle in place with a 7/16" or adjustable wrench. Tighten both tension nuts with a 7/16" wrench. (e)
    - Reinstall rail assembly to powerhead. FIG.6.
    - Reinstall belt guard if applciable. FIG. 5.
11. Reinstall opener assembly to mounting hardware.
12. Reinstall door arms in reverse of step 6.
13. Install wall control and Safe-T-Beam wires.
14. Install light bulbs and lens cover(s).
15. Plug opener in.
16. Reset limits and fully test opener. Refer to owners manual or visit www.GenieCompany.com
17. Install BBU, if equipped. Plug BBU harness into top of powerhead.

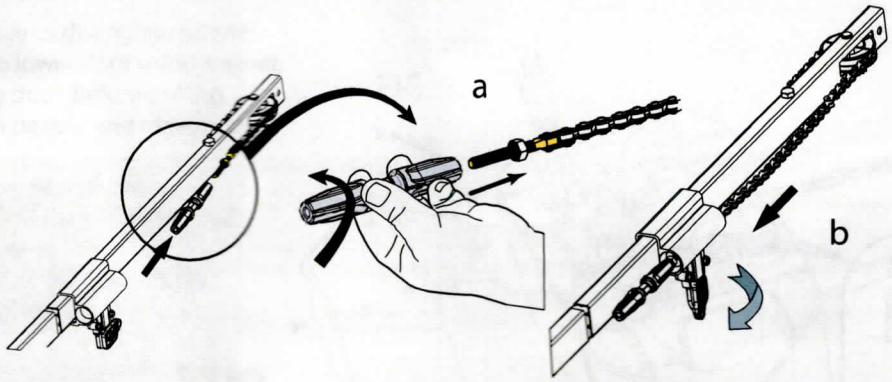

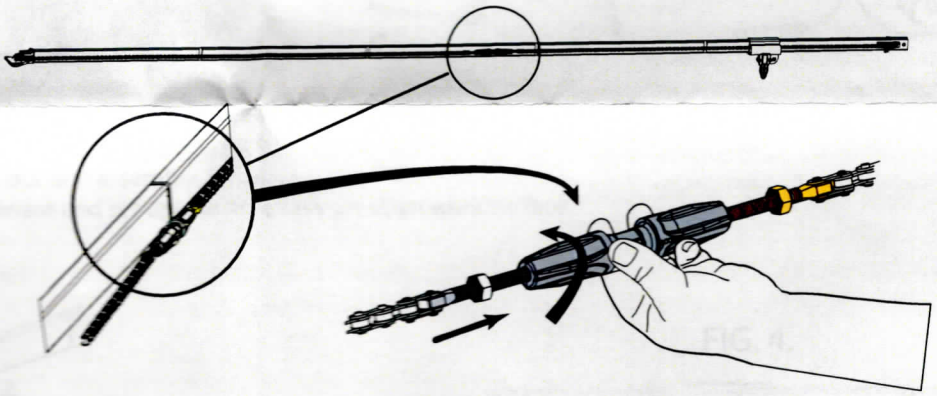

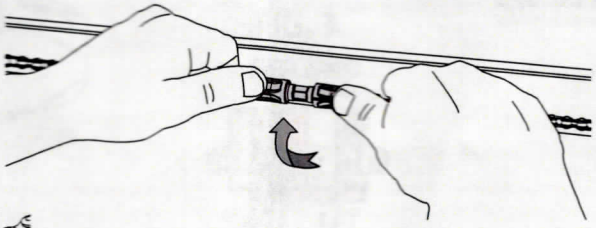

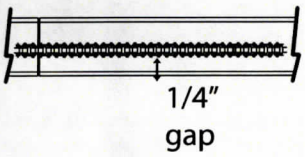

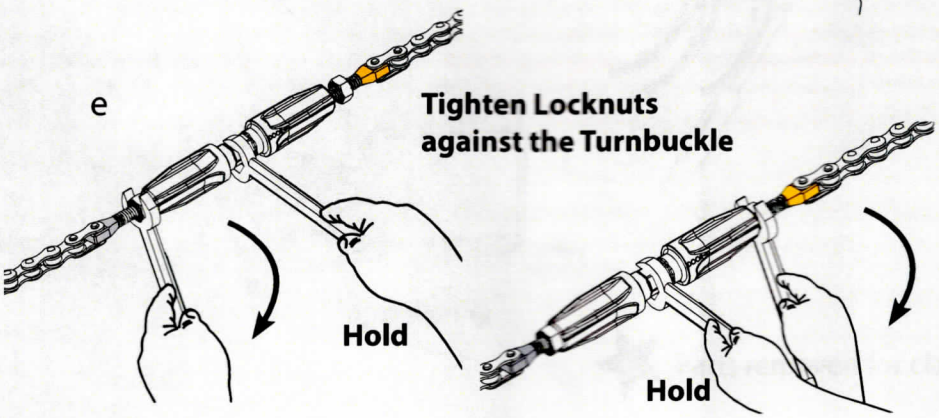

Parts removed for clarity