SPECIFICATIONS

PHYSICAL

Dimensions	13.05"(H) x 6.50"(W) x 5.15"(D)
Shipping Weight	8 lbs.

ELECTRICAL

Input	12–24 VAC/DC 12-VDC transformer included (PS-12DC1)
Current Draw	less than 190 mA @ 12 VDC less than 160 mA @ 24 VDC with relay latched, LEDs and lighted keypad on

RELAY

Contact Rating	10 A @ 120 VAC / 24 VDC
Max Switching Voltage	250 VAC / 30 VDC
Max Switching Current	15 A
Max Switching Power	240 W / 2,770 VA

COMMUNICATION

Cellular Network	4G LTE

ENVIRONMENTAL

Operating Temperature	-15 to 158 °F

⚠ *Actual voltage should be no more than 10% beyond specified range. Use of the included 12-VDC transformer is recommended.*

CONTROL IT YOUR WAY

- APP
- TEXT
- VOICE
- KEYPAD*
- DIRECTORY CALL
- WIEGAND DEVICES

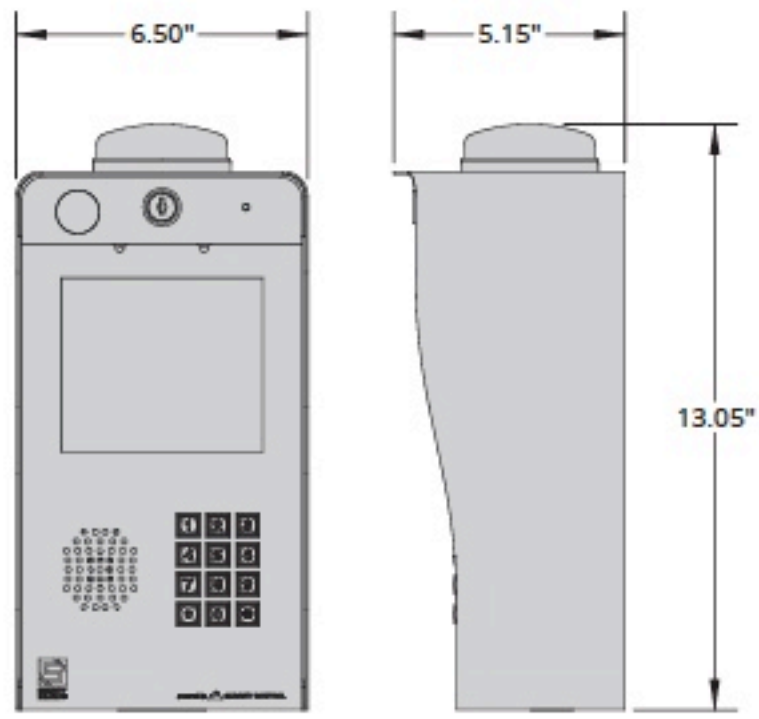

GET STARTED NOW!

PAY JUST **ONE** BILL!†

Unit includes a GSM SIM card ready for activation.

We do ALL the legwork for you!

SUMMIT CONTROL™
it's that simple!

visit **summitcontrol.com**

** Because keypad codes are managed via Summit Control, they cannot be added or deleted without an active service plan.*
† Monthly bill covers the cost of the SIM card, actions gateway, servers, maintenance, development, app, and tech support.

SECURITY BRANDS INC™
your *partner* in access control

1675 W Yale Ave
Englewood, CO 80110
securitybrandsinc.com

Tel: (800) 541-5677
Fax: (303) 799-9756

Apple and the Apple logo are trademarks of Apple Inc., registered in the U.S. and other countries. App Store is a service mark of Apple Inc., registered in the U.S. and other countries. Google Play and the Google Play logo are trademarks of Google LLC.

© 2018 Security Brands, Inc. All rights reserved.

SS-16X2-EN Rev. C (3/2018)