WIRING GUIDE

Wiegand Device to Ascent 30-511 Circuit Board

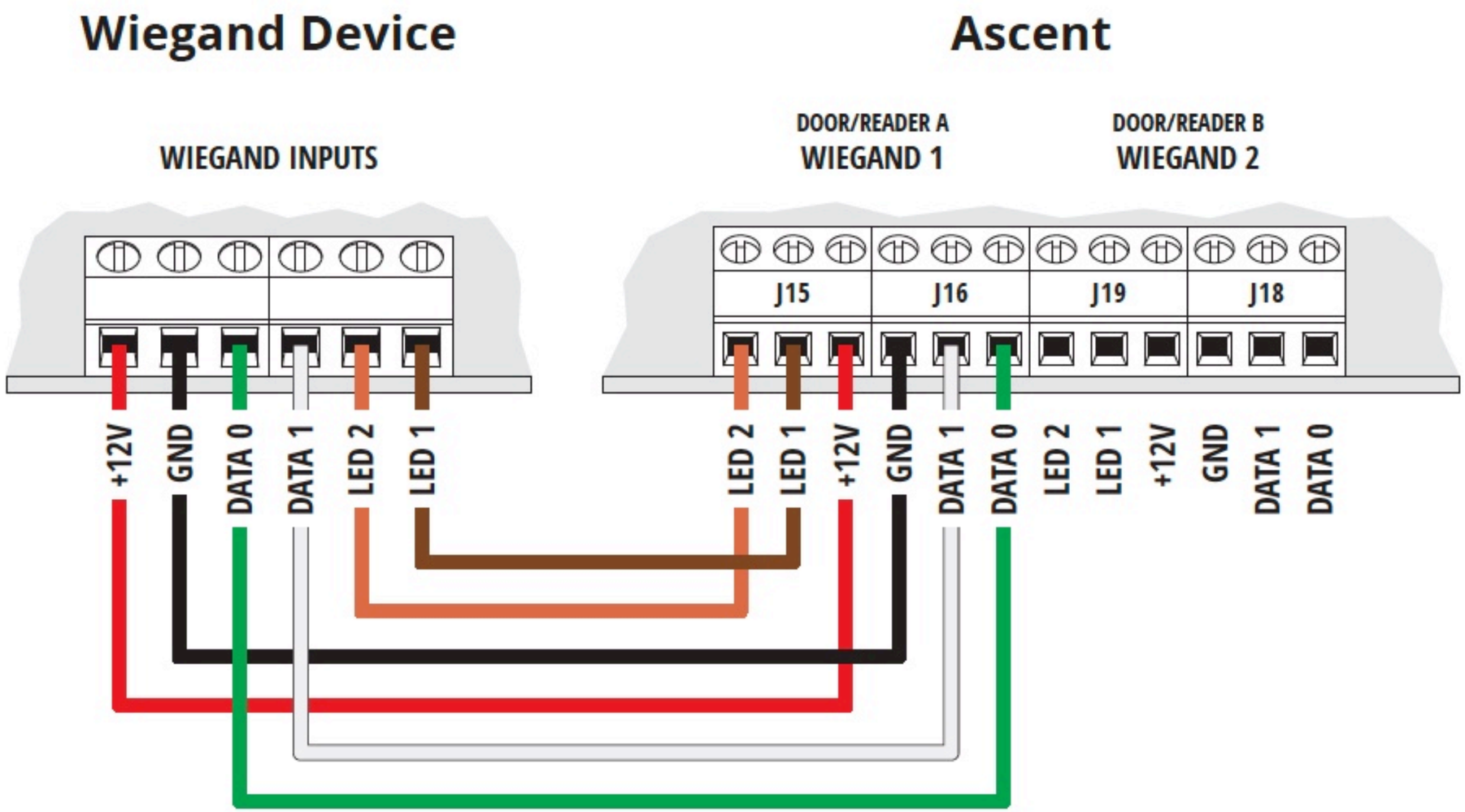

CAUTION!

Disconnect power to Ascent unit before connecting Wiegand devices.

Failure to disconnect power can damage unit!

IMPORTANT!

Wiegand inputs are **NOT AVAILABLE** on all Ascent models.

Please ensure your model is Wiegand compatible before proceeding.

NEED HELP

Call **(844) 259-8265**

Email **support@summitcontrol.com**

We are available **Mon–Fri / 8am–5pm Central**

SECURITY BRANDS INC™
your *partner* in access control

© 2018 Security Brands, Inc. All rights reserved.