A Status Check

Wiring to enable Gate Status Check

Ascent Status and Event Terminals

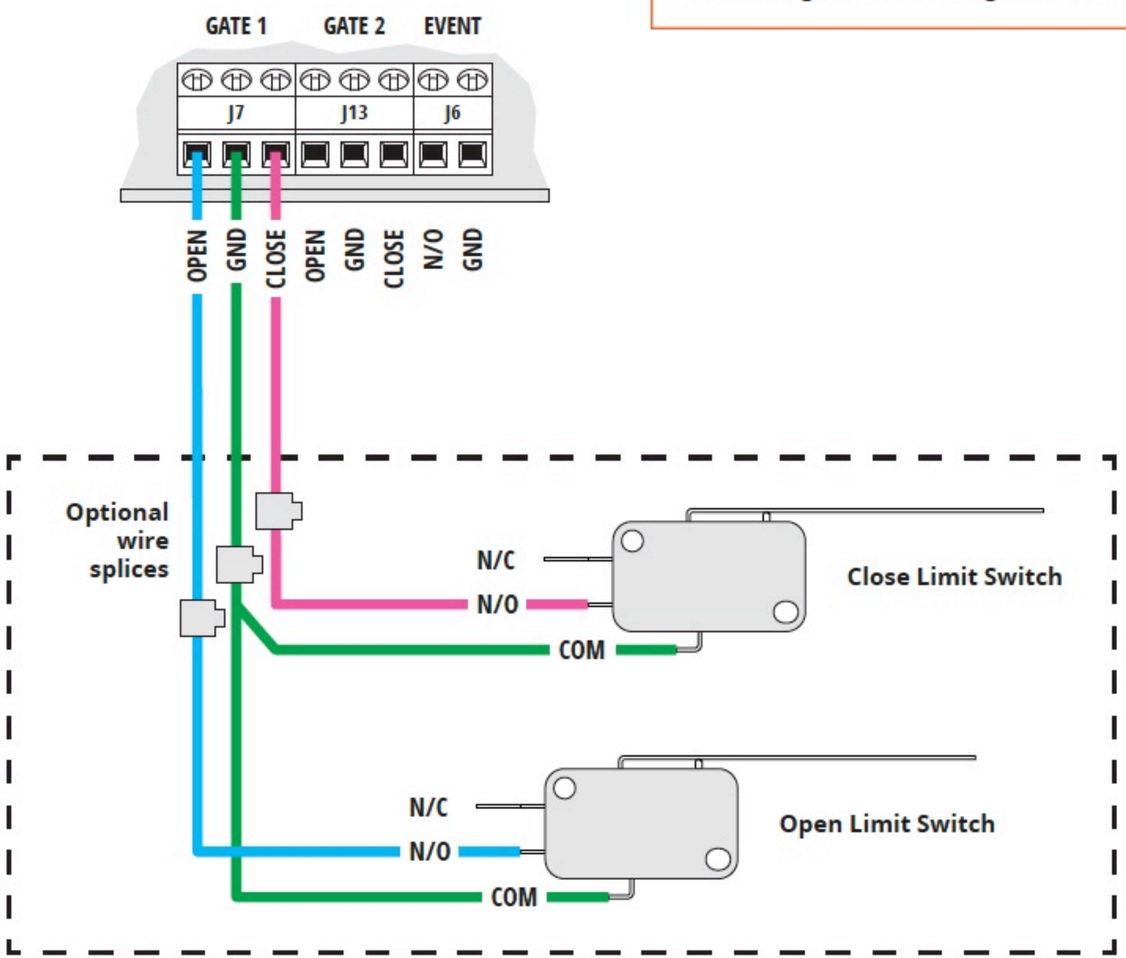

Gate Operator

(if equipped with limit switches)

⚠ CAUTION!

The Status Terminals are designed for low voltage (**3 V or less**). Check the voltage on your status wires before connecting. If it is above 3 V, you will need to contact **Technical Support**.

Exceeding 3 V can damage Ascent!

B Event Input

Wiring for accessories such as a request-to-exit device

Ascent Status and Event Terminals

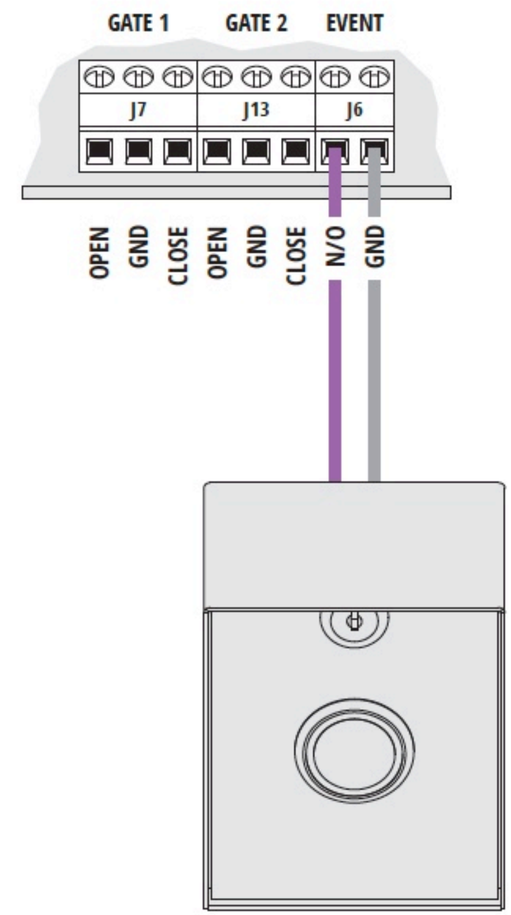

Request-to-Exit

(**S-RTE-P** is shown)